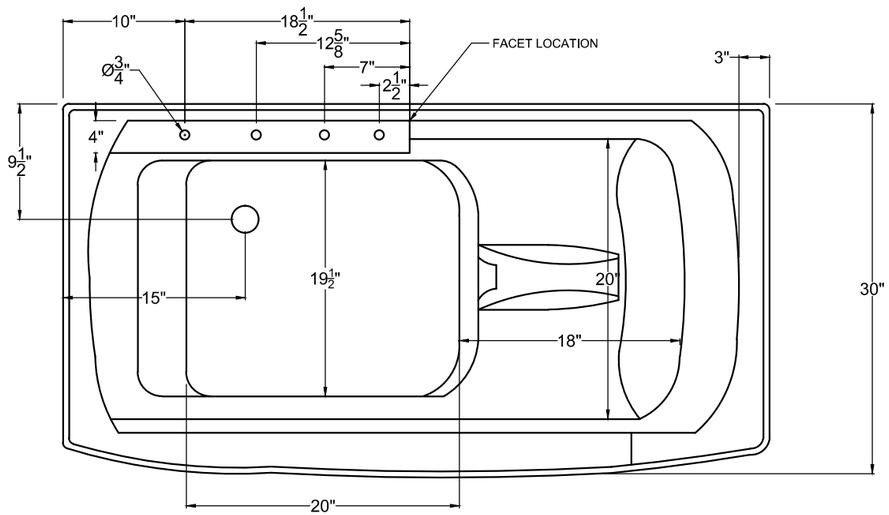

TOP VIEW

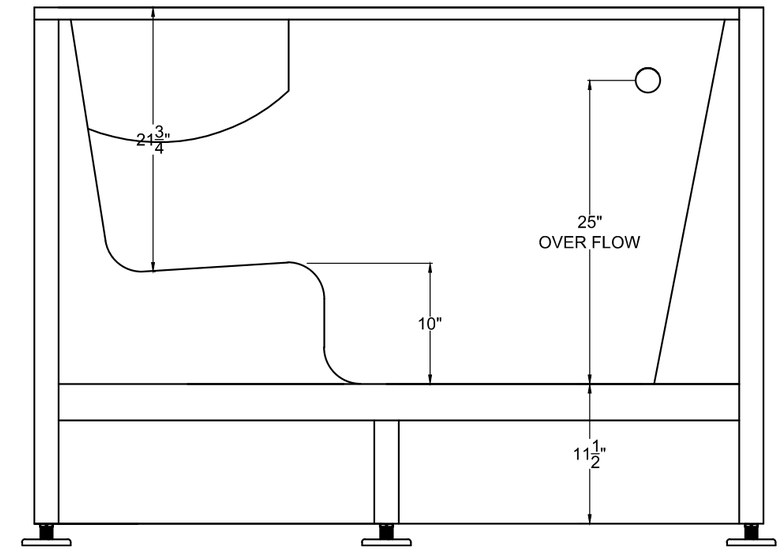

BACK VIEW

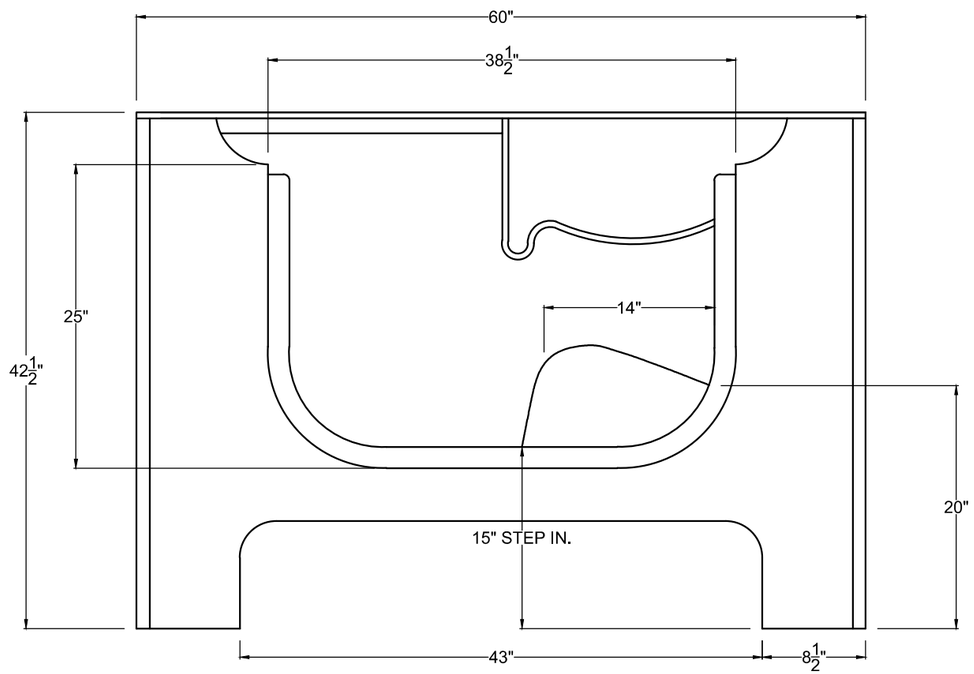

FRONT SIDE VIEW

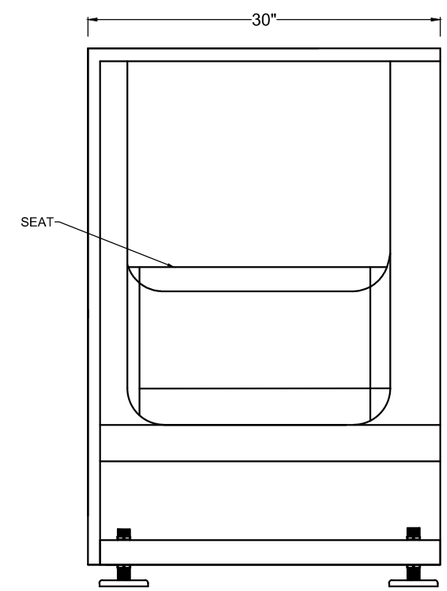

RIGHT SIDE VIEW