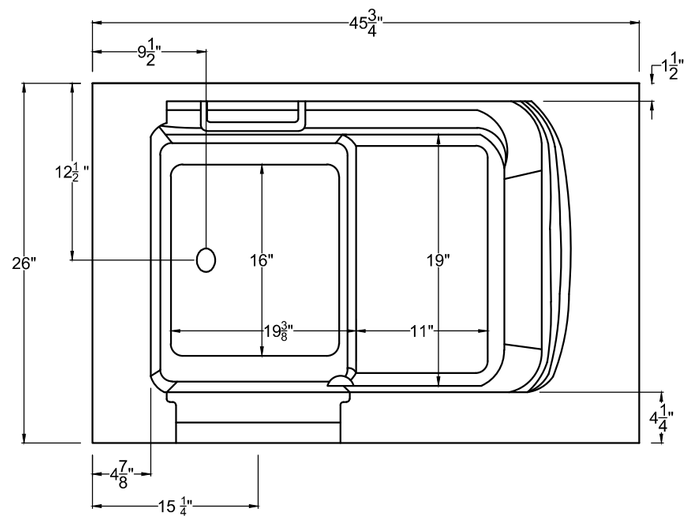
45 3/4"
9 1/2"
1 1/2"
12 1/2"
26"
16"
19"
19 3/8"
11"
4 1/4"
4 7/8"
15 1/4"

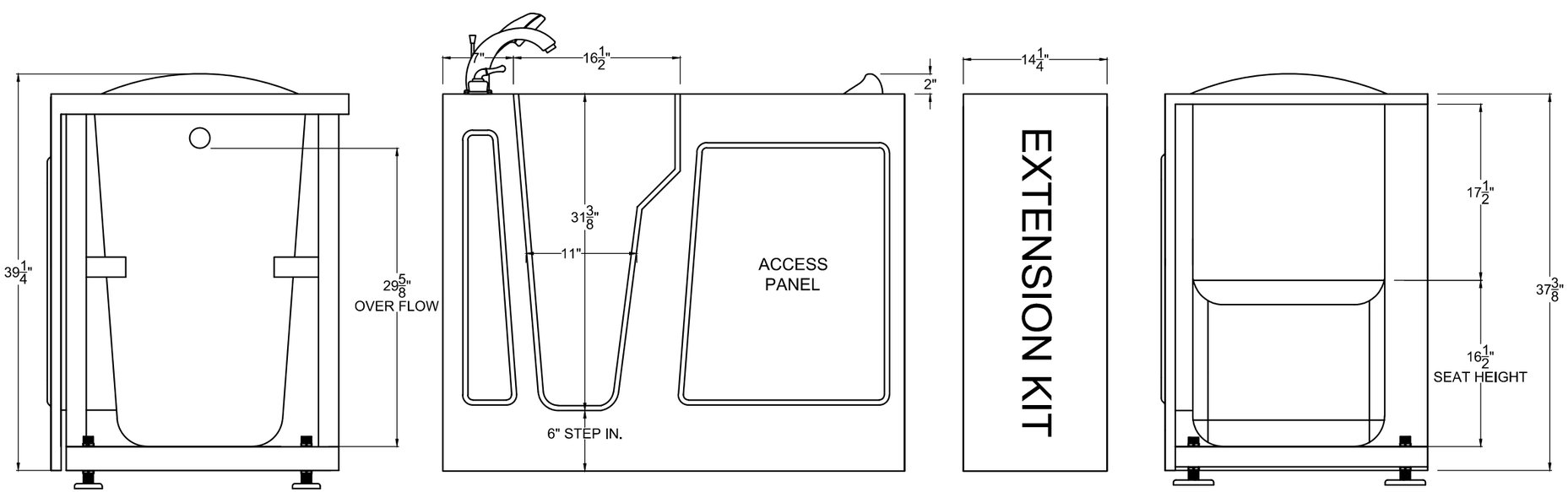
39 1/4"
29 5/8"
OVER FLOW
7"
16 1/2"
2"
31 3/8"
11"
ACCESS
PANEL
6" STEP IN.
14 1/4"
EXTENSION KIT
17 1/2"
37 3/8"
16 1/2"
SEAT HEIGHT